Your Best Connection

Anderson Power Products®

Assembly Instructions for SAF-D-GRID® Receptacle

2003G1 Series, Receptacle Contact, #12/18 AWG
2002G_ & 2005G_ Receptacle Housing

Crimp Tooling

Part Number	Description	Hand Tool	Application Tooling		
			Press	Air Feed	Applicator
2003G1	Receptacle Contact, Reeled	-	354500 - 1	354578 - 1	1852859 - 3
2003G1-LPBK	Receptacle Contact, Loose Piece	1309G9	-	-	-

APP tooling is required for UL, CSA & other safety agency compliance. Use of unapproved tooling will void connector warranty.

Consult instruction manual for specific operating and maintenance procedures.

Prior to crimping, strip back the wire insulation 0.34" [8.6mm] ± .01" [0.3mm]. These contacts should not be crimped to any wire larger than #12 AWG or smaller than #18 AWG. Each of the three wires will use the same 2003G1 series contact.

Contacts that have been crimped properly should meet the following criteria:

1. Wire must be visible at contact end of wire barrel and should extend beyond the wire barrel, but not beyond the wire stop.
2. Wire must be visible at the wire entry end of the wire barrel.
3. A bell-mouth should exist at the wire entry end of the wire barrel (Figure1).
4. The contact should be straight and parallel to the wire barrel as indicated. A slight upward or downward bending (± ½º) of the contact is allowed (Figure1).
5. The recommended crimp heights are given in Table 1. The crimp height is measured with calipers in the area between the arrows (Figure 1).

Receptacle Contact Crimping

Figure 1

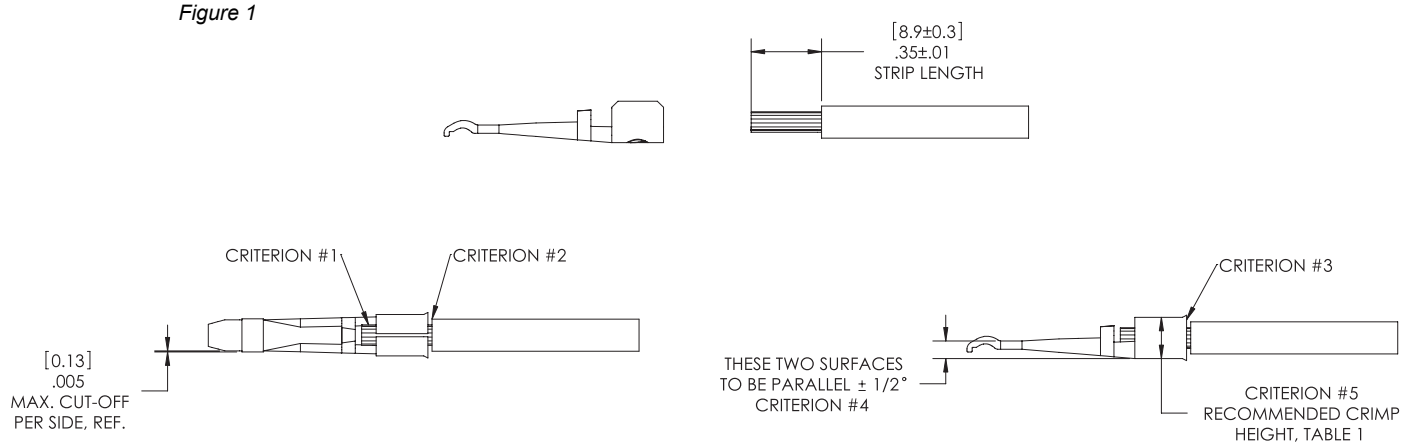

Contacts deformed by improper crimping or assembly should be discarded. Do not attempt to manually manipulate or re-work.

Actual values may differ from the recommended values given below. These values are only guidelines for class C stranded tinned copper wire, and should give contact retention forces approximating the values required by UL486A. Actual measurements of pull-out force versus contact crimp height should be made to establish correct limits for the type of wire and machine conditions in each individual situation. As such, process controls should be established based on initial sample evaluations.

Table 1

Wire Size (AWG)	Crimp Height		Min. Pull Out Force, UL486A	
	Inch	MM	Lbs.	N
12	.132 ± .005	3.35 ± .13	70	311
14	.124 ± .005	3.15 ± .13	50	222
16	.120 ± .005	3.05 ± .13	30	133
18	.115 ± .005	2.92 ± .13	20	89

Once the contacts have been crimped onto the wires, they should be inserted into the receptacle housing (Figure 2.). The ground contact should be inverted relative to the power contacts. The positive wire should be inserted in the position marked with a "+" on the bottom of the housing. The negative wire should be inserted in the position marked with a "-" on the bottom of the housing. Once the contacts have been inserted, pull slightly to verify they are fully seated past the internal spring.

Receptacle Contact Insertion

Figure 2

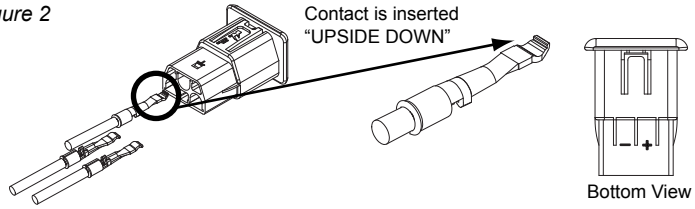

Use extraction tool 111038G2 to remove contacts if required. Do not attempt to remove contacts while the connector is still energized. Follow the below steps:

1. The contact has some forward and backward movement in the housing. Pull on the wire to move the contact all the way back in the housing.

2. Place the tip of the tool between the spring and contact and rotate to depress spring.

3. Pull wire back slightly to move contact backward from spring as shown in next figure.

4. Rotate tool in opposite direction and remove from the connector while pulling the wire/contact from the housing.

Inspect contact surfaces after removal. Discard contacts if plating is scratched and bare copper is visible.

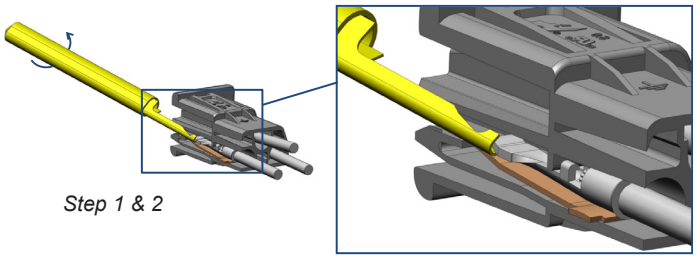

Step 1 & 2

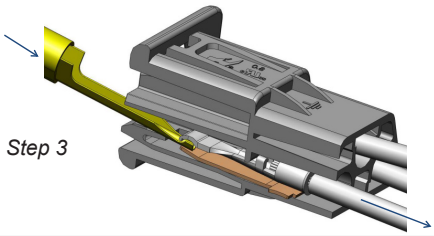

Step 3

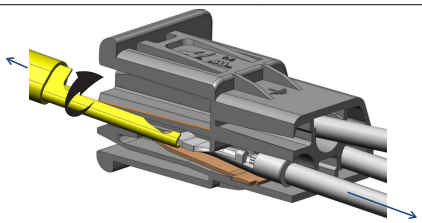

Step 4

 HEADQUARTERS: Anderson Power Products®, 13 Pratts Junction Road, Sterling,MA 01564 USA T: 978-422-3600 F:978-422-0128
www.andersonpower.com