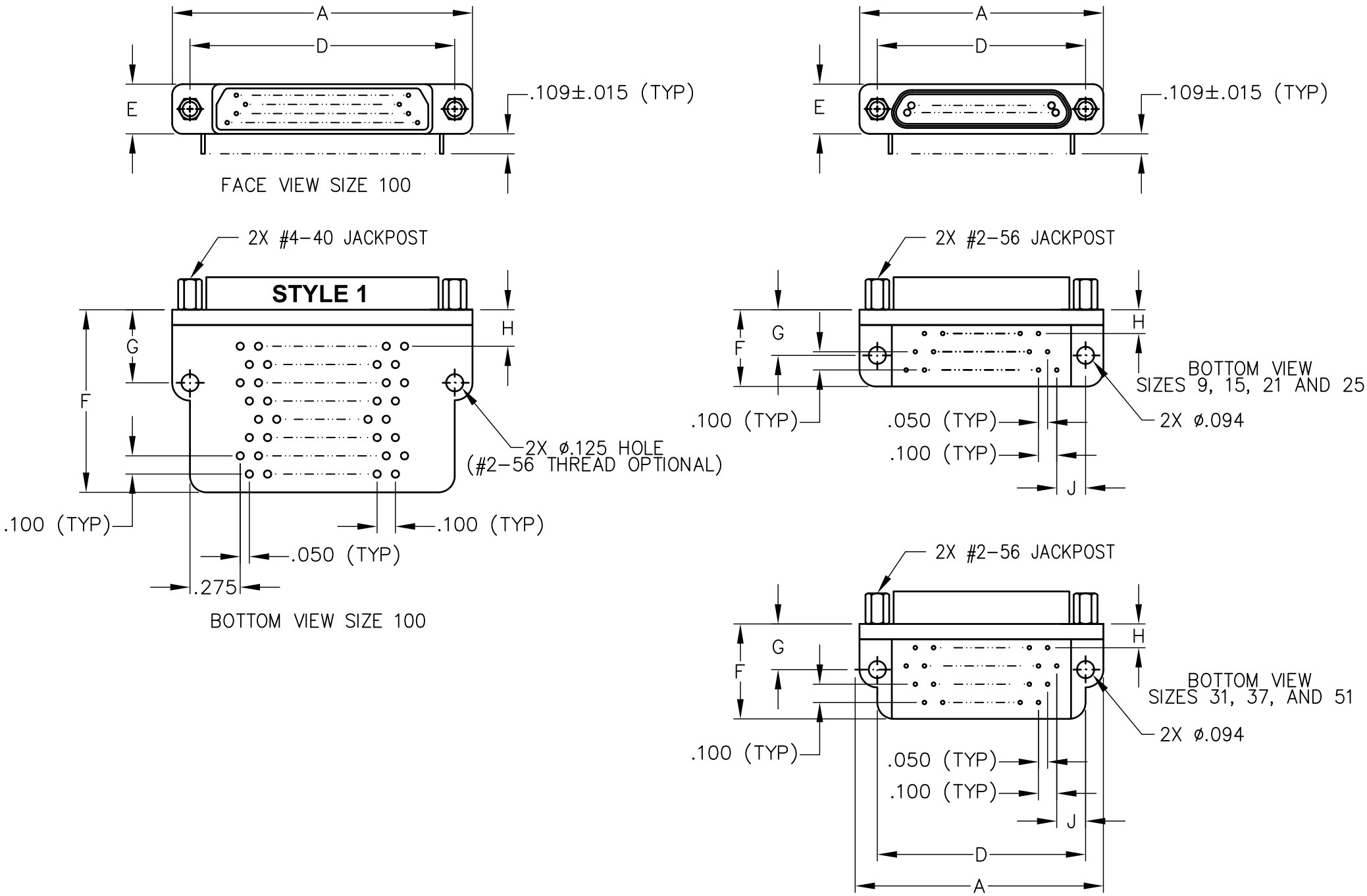
A
D
E
.109±.015 (TYP)
FACE VIEW SIZE 100
2X #4-40 JACKPOST
STYLE 1
G
H
F
2X ø.125 HOLE
(#2-56 THREAD OPTIONAL)
.100 (TYP)
.100 (TYP)
.050 (TYP)
.275
BOTTOM VIEW SIZE 100
2X #2-56 JACKPOST
BOTTOM VIEW
SIZES 9, 15, 21 AND 25
2X ø.094
.100 (TYP)
.050 (TYP)
.100 (TYP)
J
2X #2-56 JACKPOST
BOTTOM VIEW
SIZES 31, 37, AND 51
2X ø.094
.100 (TYP)
.050 (TYP)
.100 (TYP)
J
D
A