REVISIONS						
REV	ZONE	ECO#	DESCRIPTION	DRAW	APPD	DATE
-			INITIAL RELEASE	KC	PK	11/10/16
A			ADDED RoHS NOTE	KC	PK	2/15/17

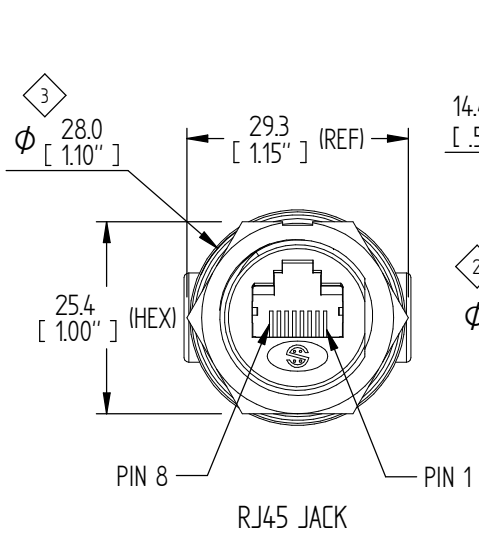

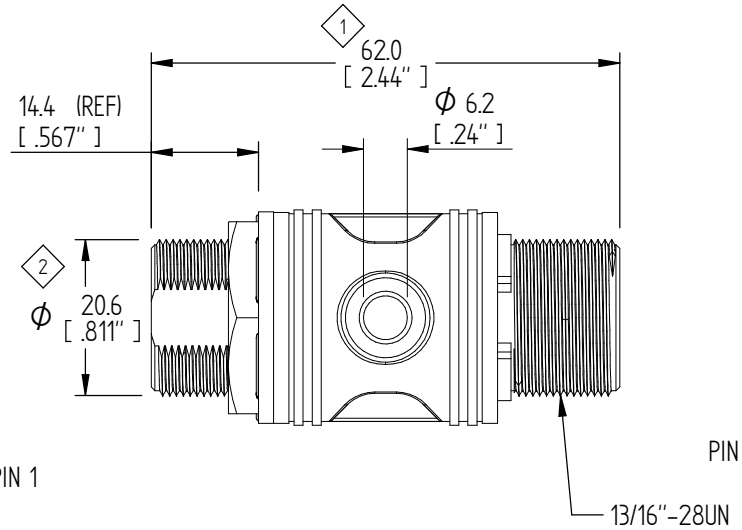

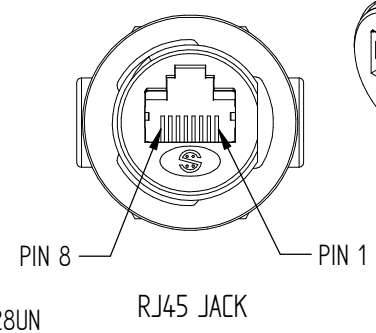

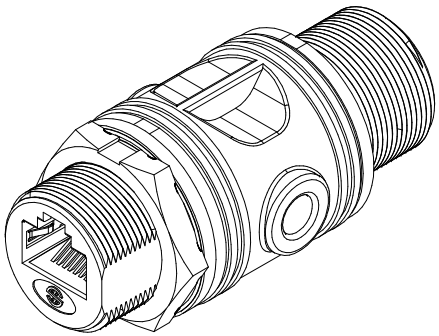

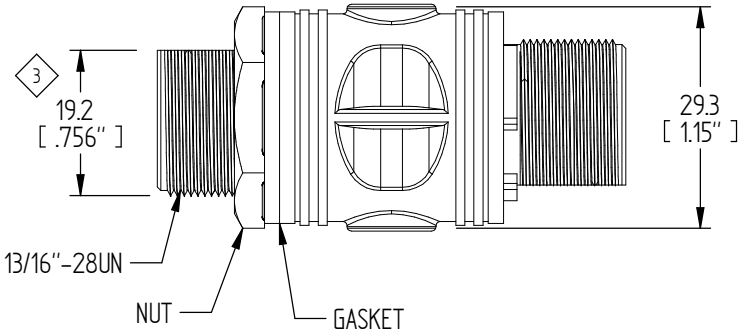

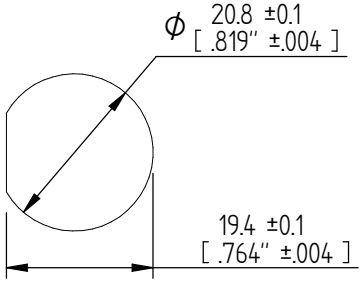

RECOMMENDED PANEL CUT-OUT

NOTE: CAD GENERATED DRAWING DO NOT UPDATE MANUALLY.

NOTES:

1. WATERPROOF RATE: IP67 (NO INGRESS OF DUST/PROTECTED AGAINST HARMFUL EFFECT CAUSED IN 1 METER WATER WITHIN 30 MINUTES)
2. TEMPERATURE RANGE: -20°C TO +80°C
3. MATERIAL: PIN: COPPER ALLOY, GOLD PLATED HOUSING: NYLON, BLACK SCREW NUT: NYLON, BLACK
4. MAX PANEL THICKNESS: 4.0mm (WITHOUT CAP CHAIN)
5. ITEMS IDENTIFIED WITH DIAMOND (◇3...◇1) MUST BE INSPECTED.
6. REFERENCE PACKAGING SPECIFICATIONS PER DOC# PKG-001
7. RoHS COMPLIANT.

PART NUMBER	IPMOD-45FSWBHD		
TITLE	JACK, PNL RJ45 WS/WS COUPLER	REV	A
UNLESS OTHERWISE SPECIFIED, DIMENSIONS ARE IN MM. TOLERANCE EXCEPT AS NOTED: DECIMAL X ±0.25 XX ±0.1 XXX ±0.05 ANGLES ±1° IMPERIAL DIMENSIONS ARE FOR REFERENCE ONLY	DRAWN: KCHOO	DATE: 11/10/2016	
	ENGINEER: D.KAPLACHINSKI	DATE: 11/10/2016	
THIRD ANGLE PROJECTION	APPROVED BY: P.KIM	DATE: 11/10/2016	
CAGE CODE: 2A589	SIZE: A	SCALE: NTS	SHEET 1 OF 1	VER: A

©COPYRIGHT 2004 PEI-GENESIS ENGINEERING PRODUCT DEVELOPMENT

PEI-Genesis
2180 Hornig Road, Philadelphia, PA 19116

NOTICE OF CONFIDENTIALITY:
THIS DRAWING IS THE PROPERTY OF PEI-Genesis, ALL RIGHTS RESERVED. REPRODUCTION BY ANY MEANS OR DISTRIBUTION TO THIRD PARTIES IS STRICTLY PROHIBITED WITHOUT THE WRITTEN PERMISSION OF AN AUTHORIZED AGENT OF PEI-GENESIS.